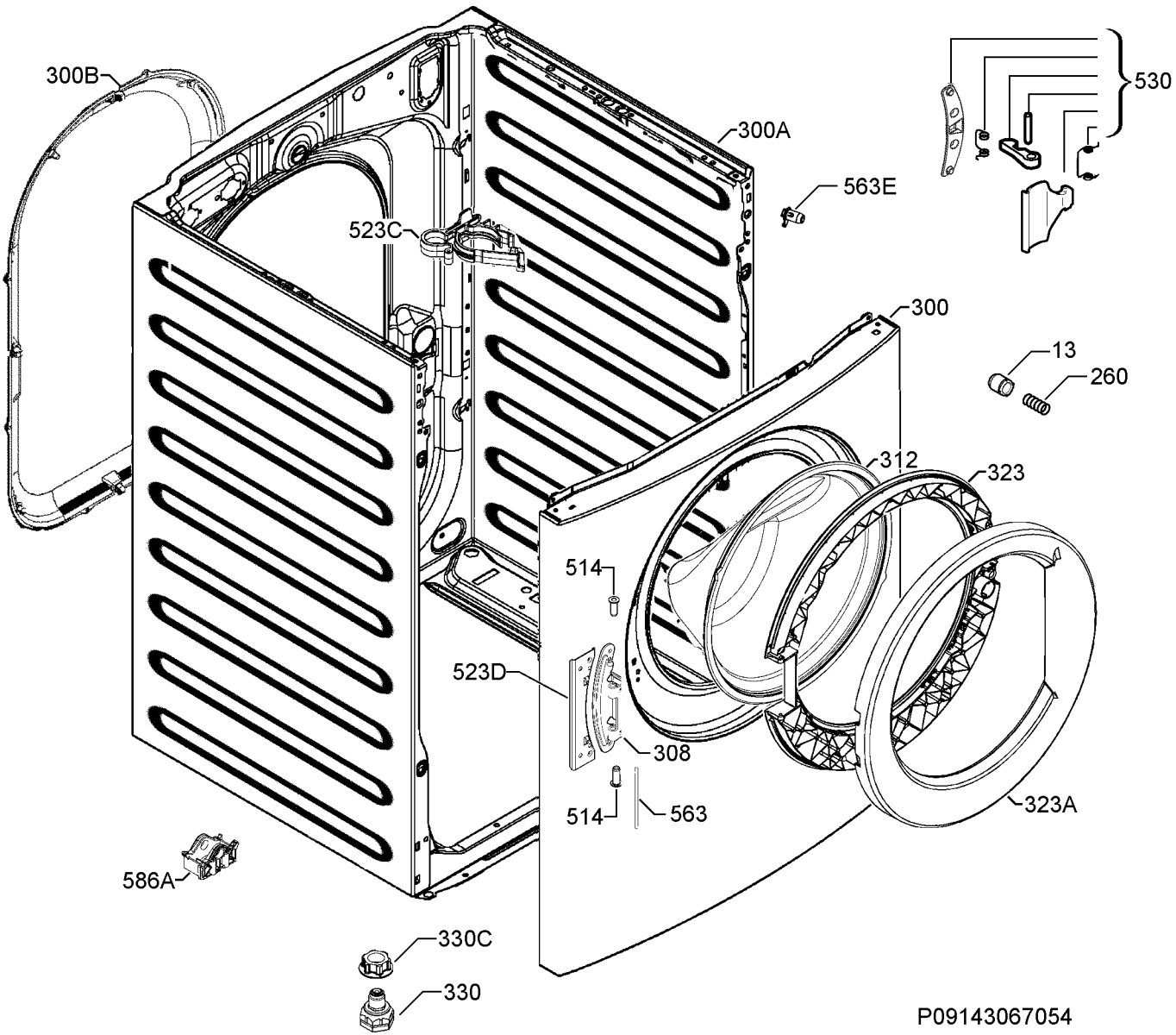

P09143067054