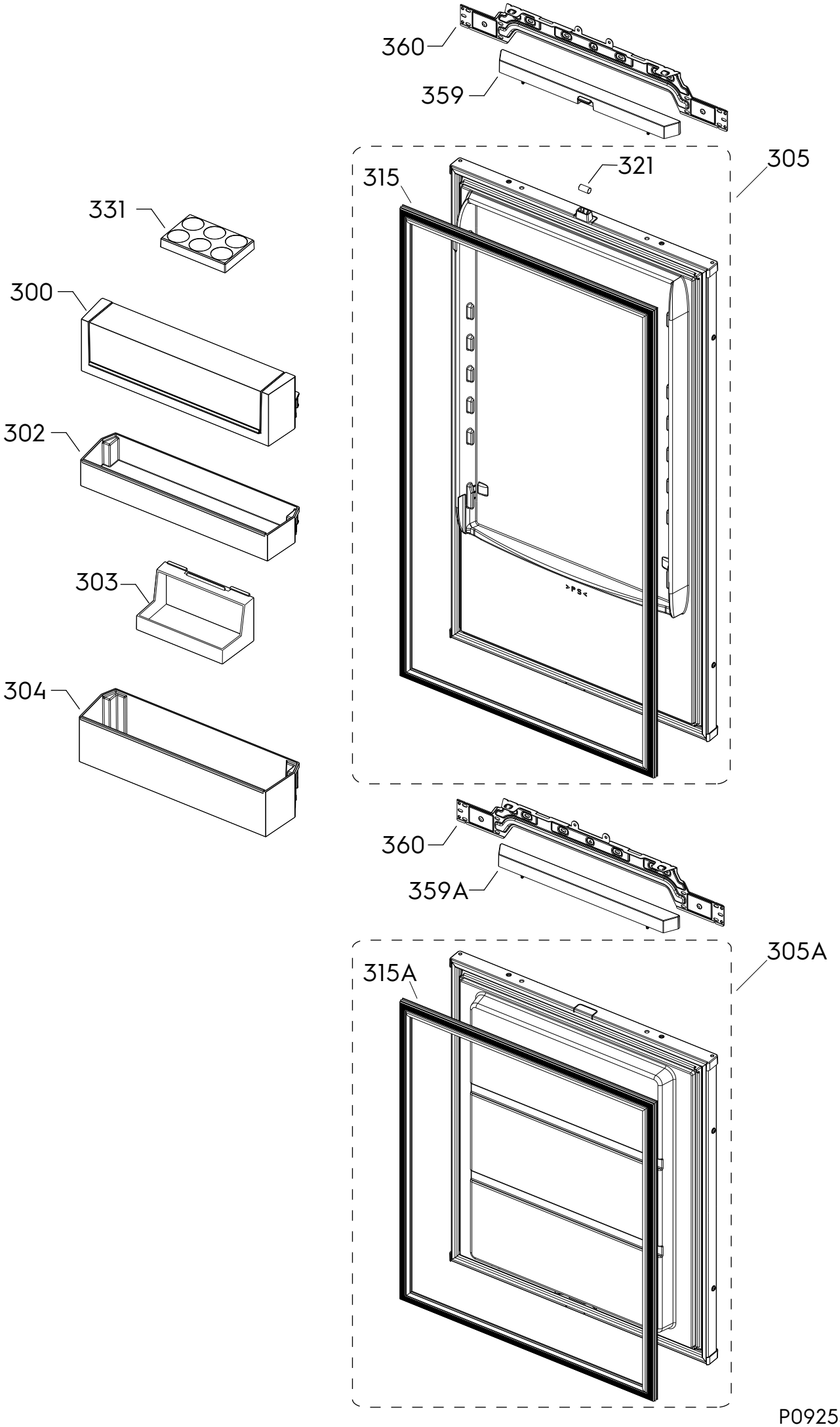

P09253098855