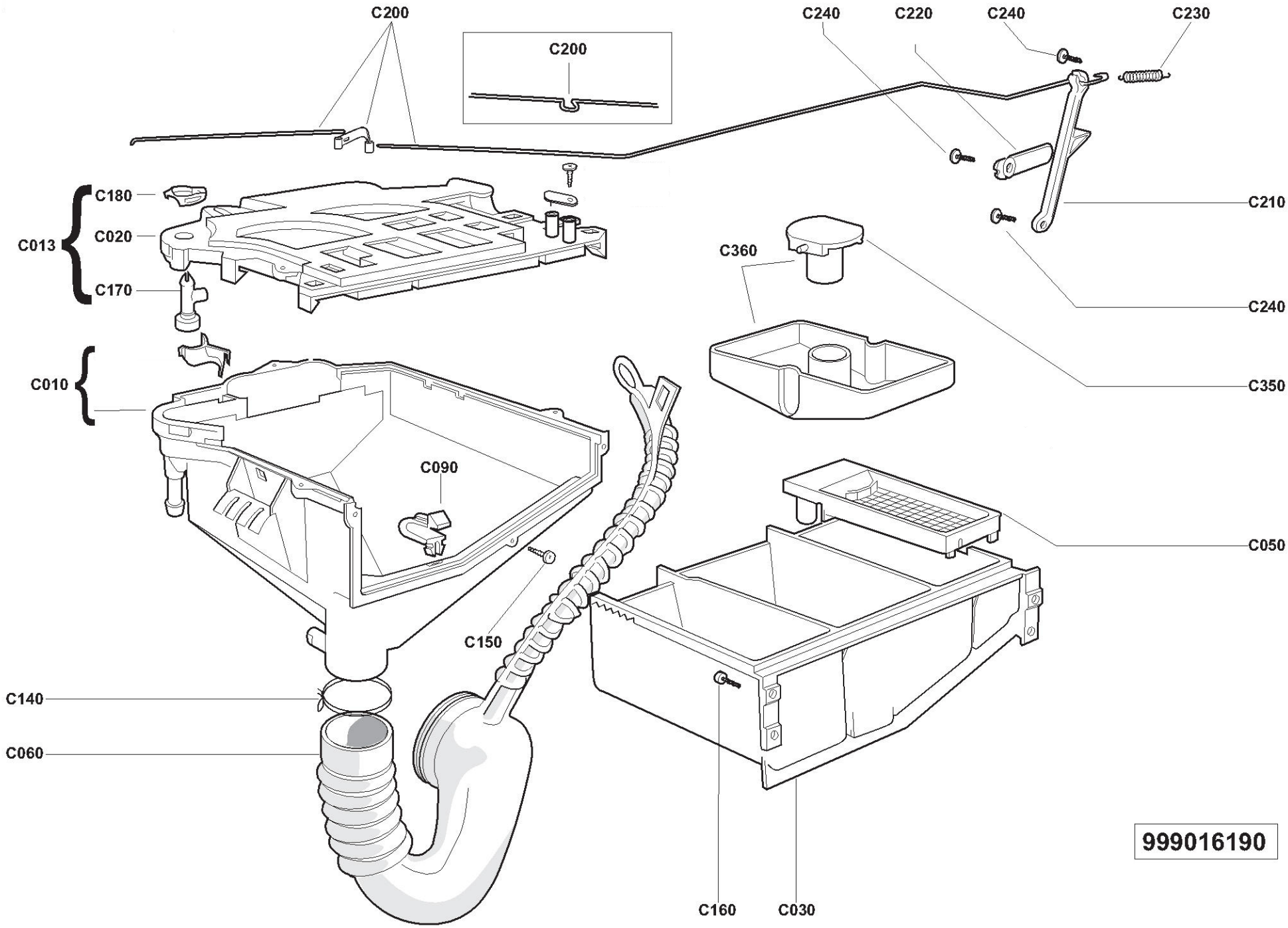
C200
C200
C240
C220
C240
C230
C210
C240
C180
C013
C020
C170
C360
C350
C010
C090
C050
C150
C140
C060
C160
C030
999016190