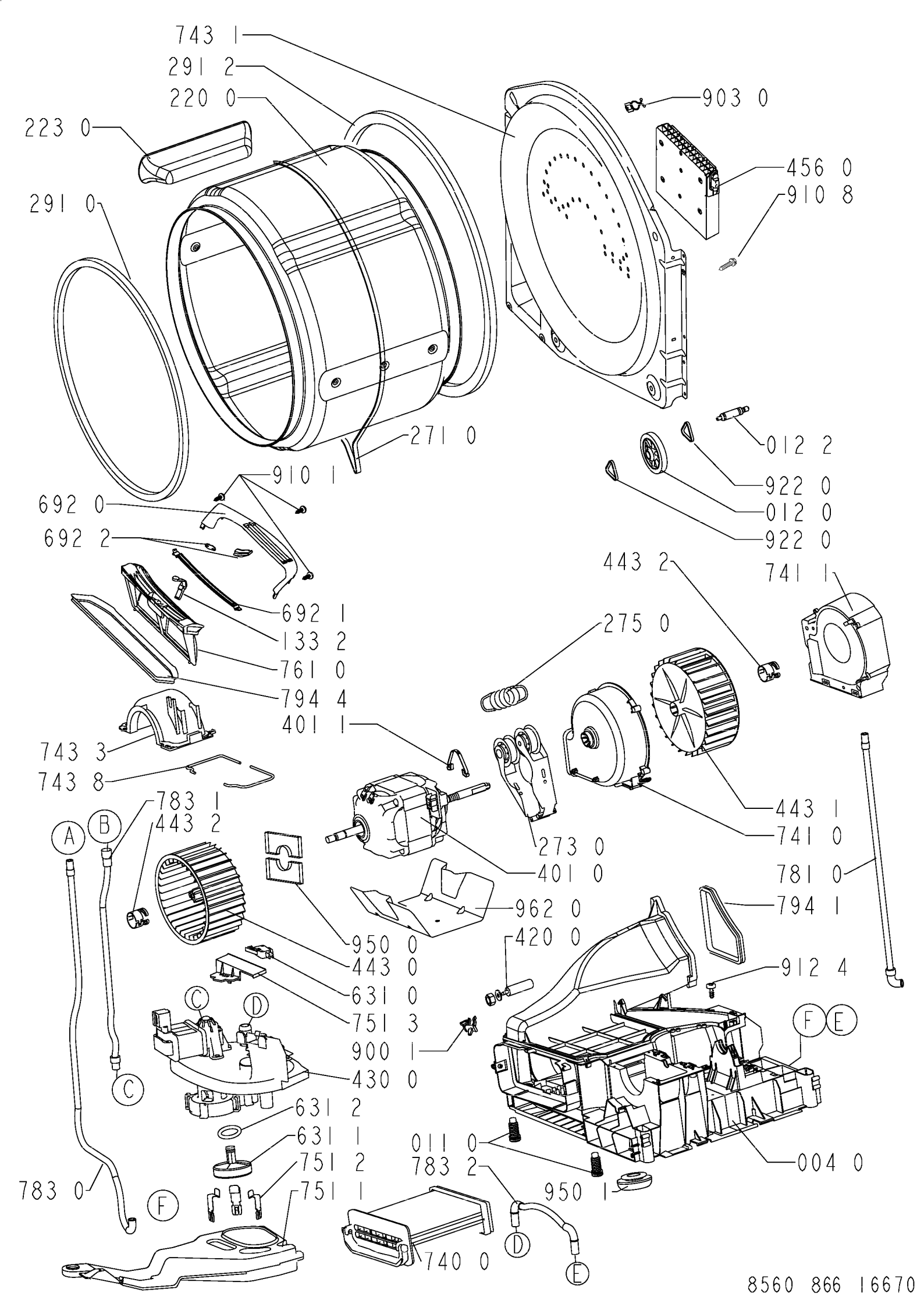

8560 866 16670