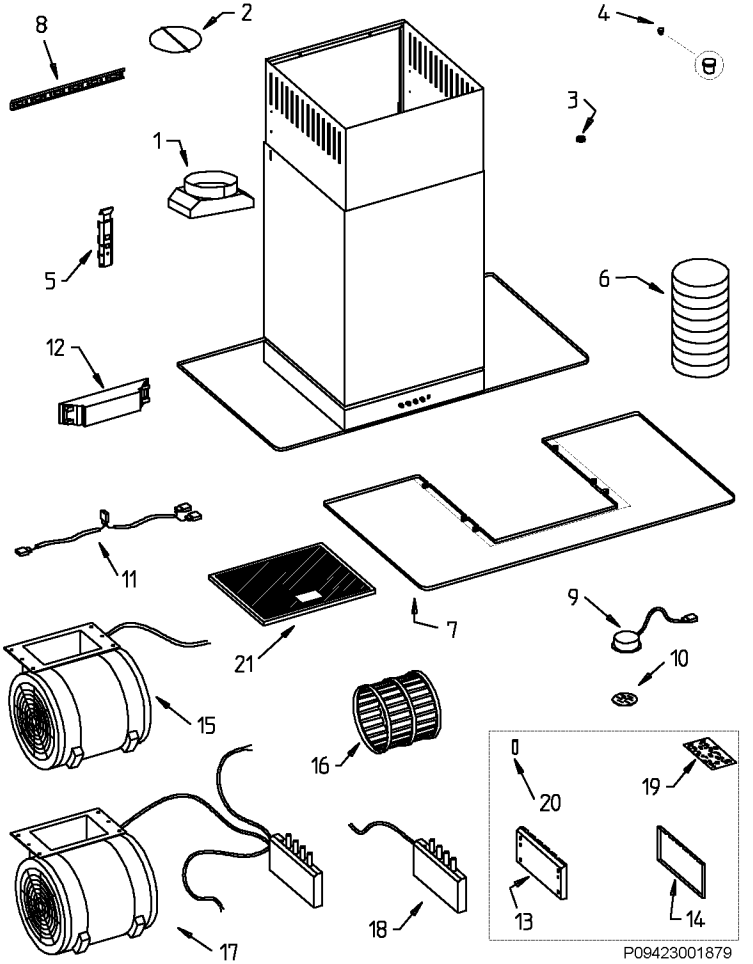
8
2
4
3
1
5
6
12
11
7
9
21
10
15
16
20
19
13
14
18
17
P09423001879