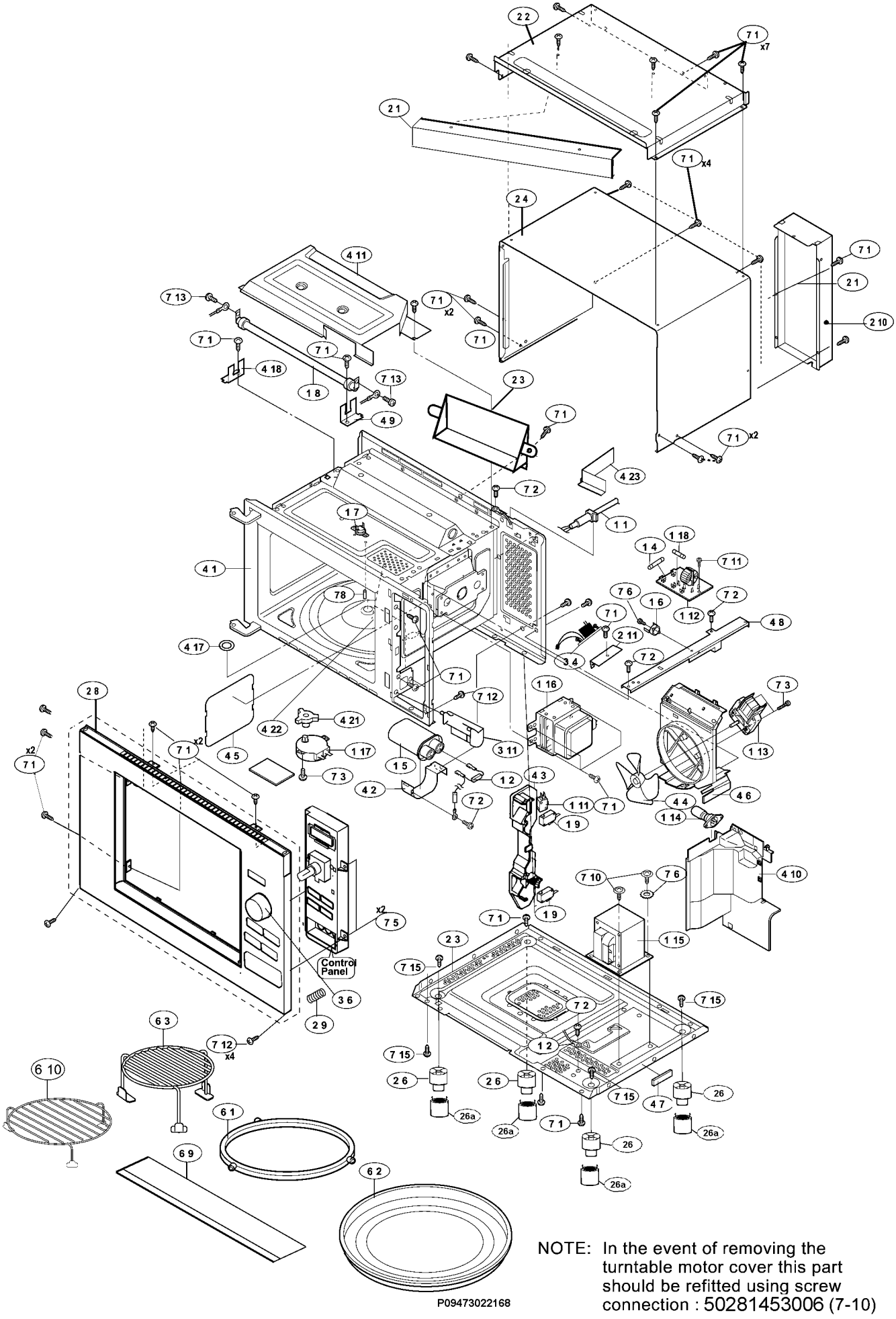

NOTE: In the event of removing the turntable motor cover this part should be refitted using screw connection : 50281453006 (7-10)